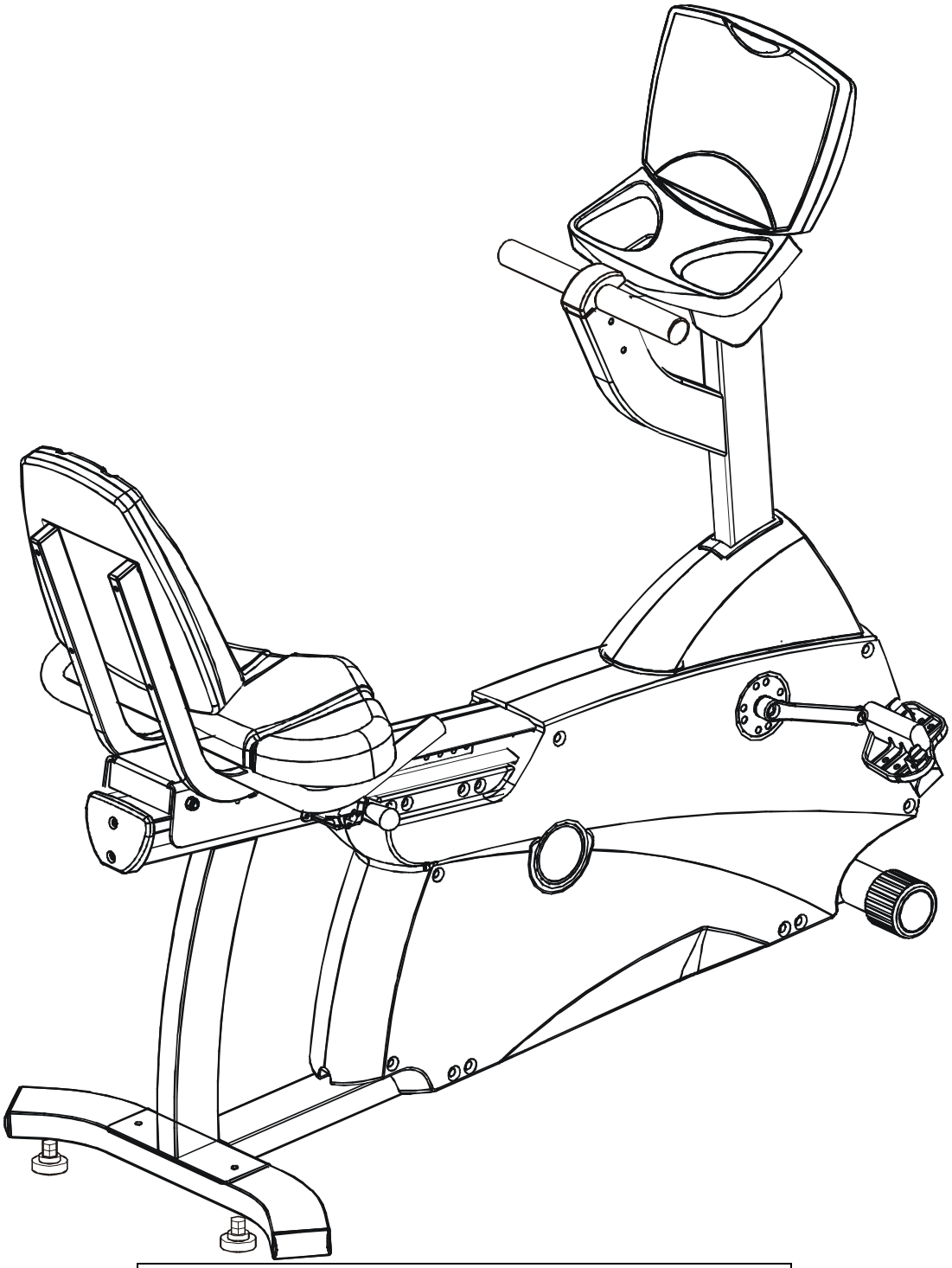

Example of a starting Serial # SR70060210000001			
SR70	06	0210	000001
Model #	Plant #	Year/month	Serial Number

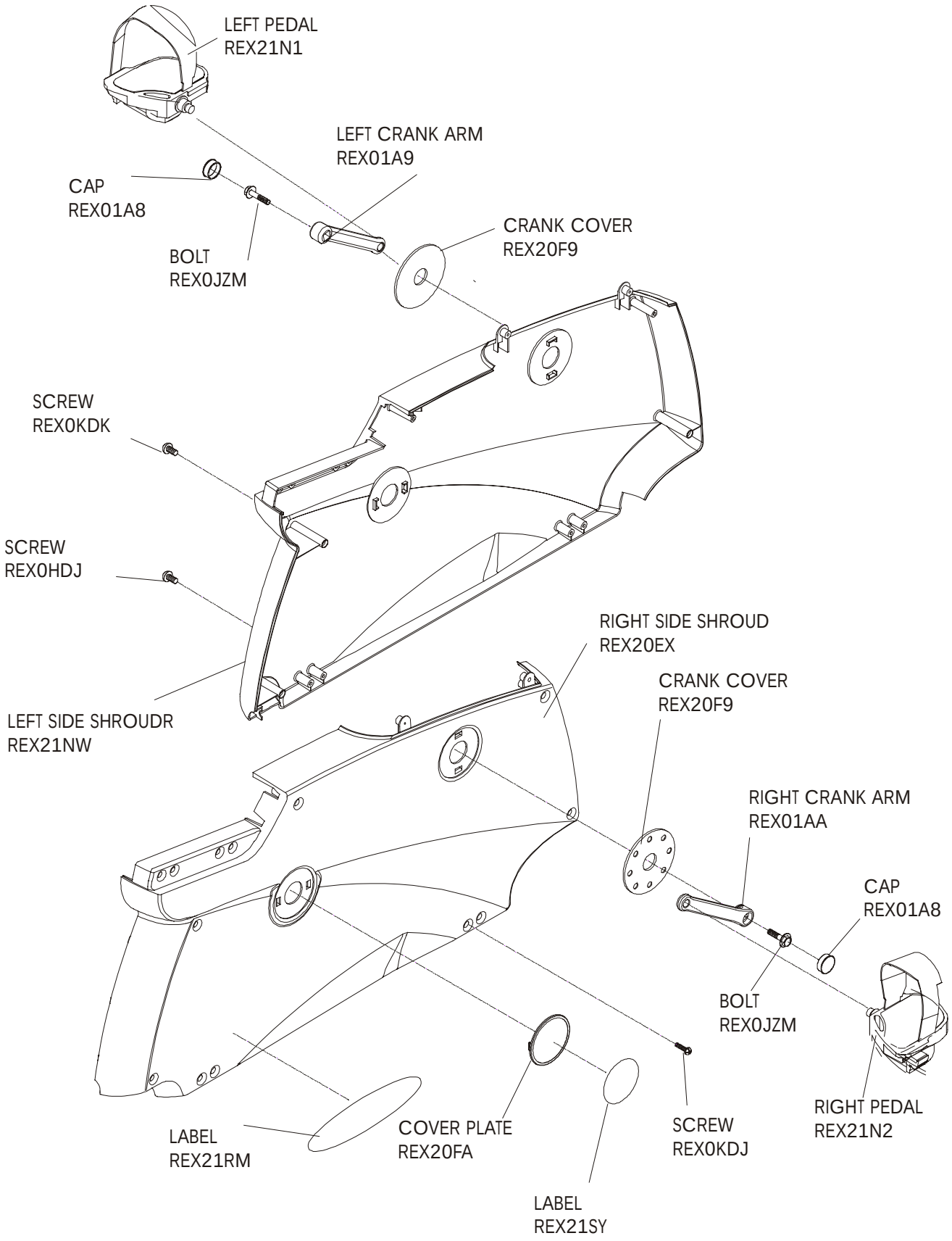
LEFT PEDAL
REX21N1
LEFT CRANK ARM
REX01A9
CAP
REX01A8
BOLT
REX0JZM
CRANK COVER
REX20F9
SCREW
REX0KDK
SCREW
REX0HDJ
LEFT SIDE SHROUDR
REX21NW
RIGHT SIDE SHROUD
REX20EX
CRANK COVER
REX20F9
RIGHT CRANK ARM
REX01AA
CAP
REX01A8
BOLT
REX0JZM
RIGHT PEDAL
REX21N2
LABEL
REX21RM
COVER PLATE
REX20FA
SCREW
REX0KDJ
LABEL
REX21SY

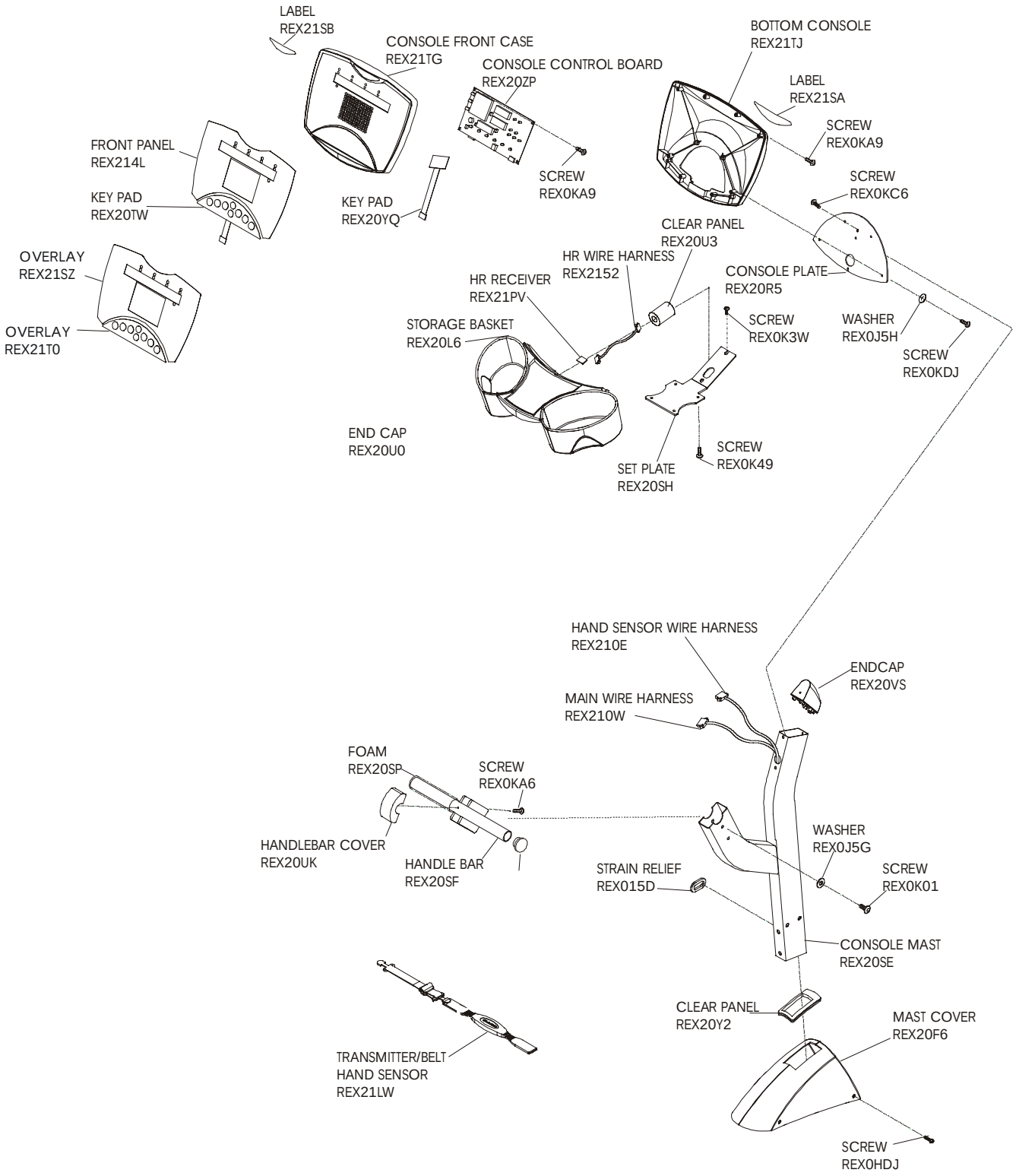
LABEL
REX21SB
CONSOLE FRONT CASE
REX21TG
CONSOLE CONTROL BOARD
REX20ZP
BOTTOM CONSOLE
REX21TJ
LABEL
REX21SA
SCREW
REX0KA9
FRONT PANEL
REX214L
KEY PAD
REX20TW
KEY PAD
REX20YQ
SCREW
REX0KA9
SCREW
REX0KC6
CLEAR PANEL
REX20U3
OVERLAY
REX21SZ
HR WIRE HARNESS
REX2152
CONSOLE PLATE
REX20R5
HR RECEIVER
REX21PV
OVERLAY
REX21T0
STORAGE BASKET
REX20L6
SCREW
REX0K3W
WASHER
REX0J5H
SCREW
REX0KDJ
END CAP
REX20U0
SCREW
REX0K49
SET PLATE
REX20SH
HAND SENSOR WIRE HARNESS
REX210E
ENDCAP
REX20VS
MAIN WIRE HARNESS
REX210W
FOAM
REX20SP
SCREW
REX0KA6
HANDLEBAR COVER
REX20UK
HANDLE BAR
REX20SF
WASHER
REX0J5G
STRAIN RELIEF
REX015D
SCREW
REX0K01
CONSOLE MAST
REX20SE
CLEAR PANEL
REX20Y2
MAST COVER
REX20F6
TRANSMITTER/BELT
HAND SENSOR
REX21LW
SCREW
REX0HDJ

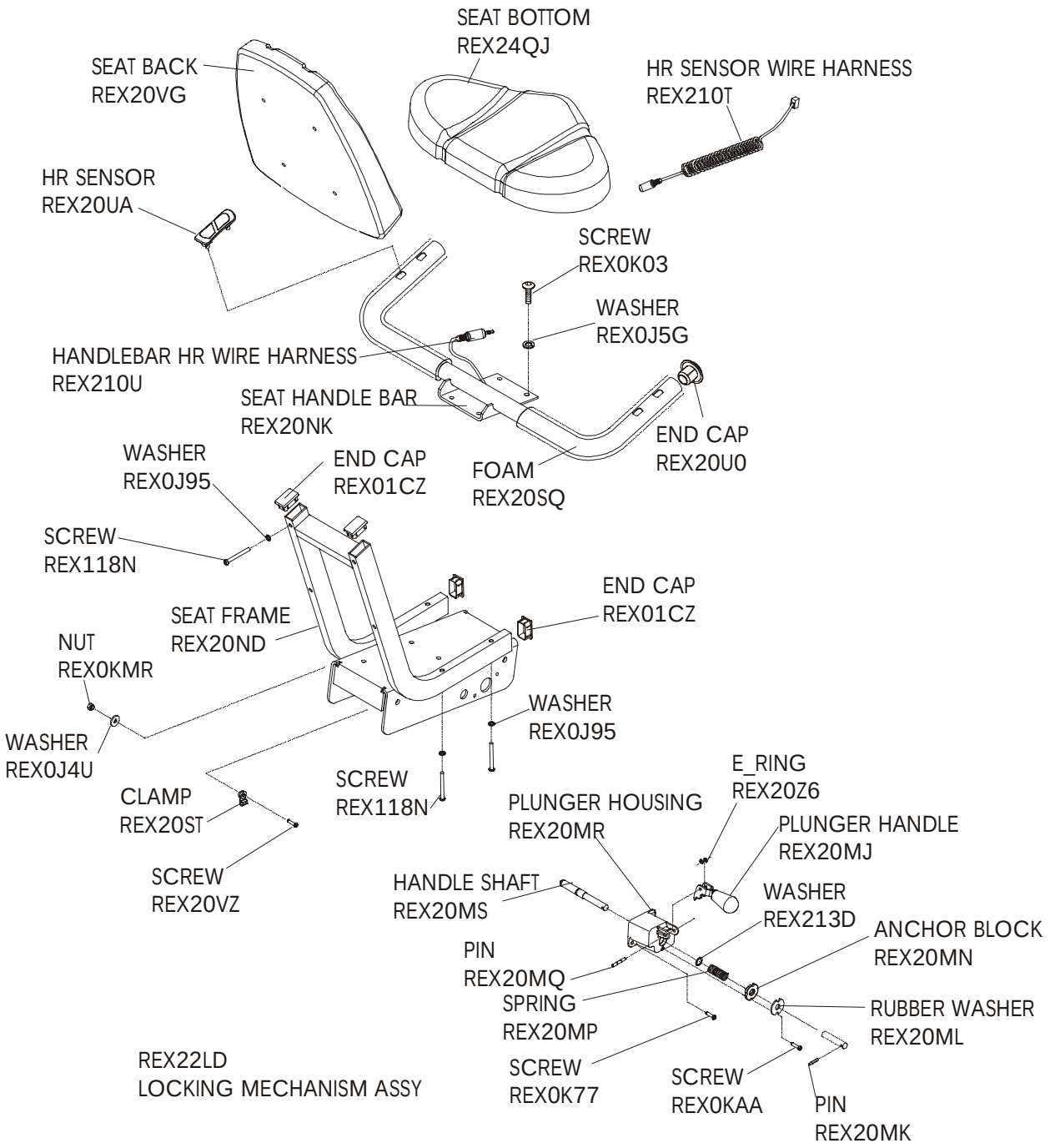

REX22LD
LOCKING MECHANISM ASSY

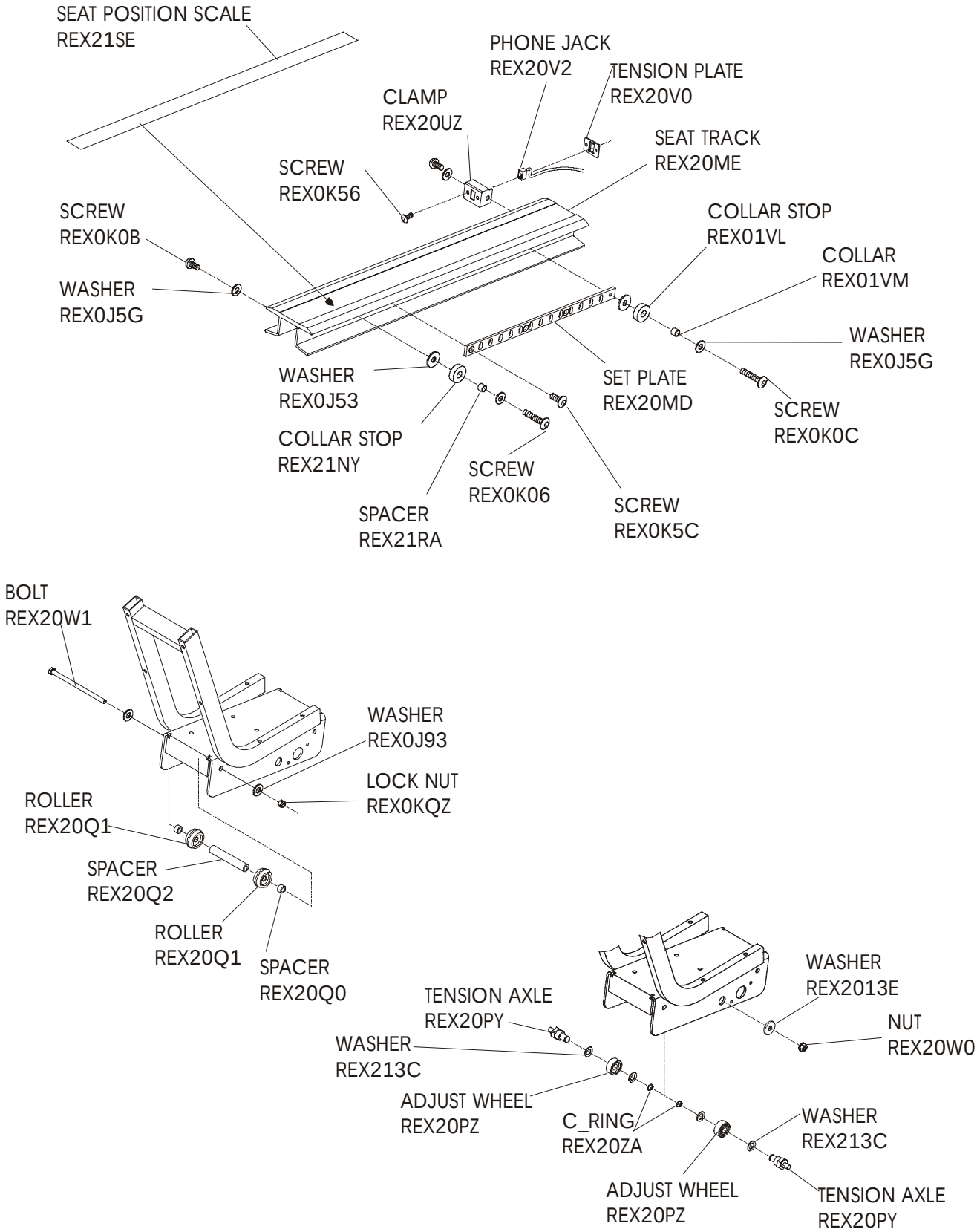
SEAT POSITION SCALE
REX21SE
PHONE JACK
REX20V2
TENSION PLATE
REX20V0
CLAMP
REX20UZ
SEAT TRACK
REX20ME
SCREW
REX0K56
SCREW
REX0K0B
COLLAR STOP
REX01VL
COLLAR
REX01VM
WASHER
REX0J5G
WASHER
REX0J5G
WASHER
REX0J53
SET PLATE
REX20MD
SCREW
REX0K0C
COLLAR STOP
REX21NY
SCREW
REX0K06
SPACER
REX21RA
SCREW
REX0K5C
BOLT
REX20W1
WASHER
REX0J93
LOCK NUT
REX0KQZ
ROLLER
REX20Q1
SPACER
REX20Q2
ROLLER
REX20Q1
SPACER
REX20Q0
WASHER
REX2013E
TENSION AXLE
REX20PY
NUT
REX20W0
WASHER
REX213C
ADJUST WHEEL
REX20PZ
C_RING
REX20ZA
WASHER
REX213C
ADJUST WHEEL
REX20PZ
TENSION AXLE
REX20PY

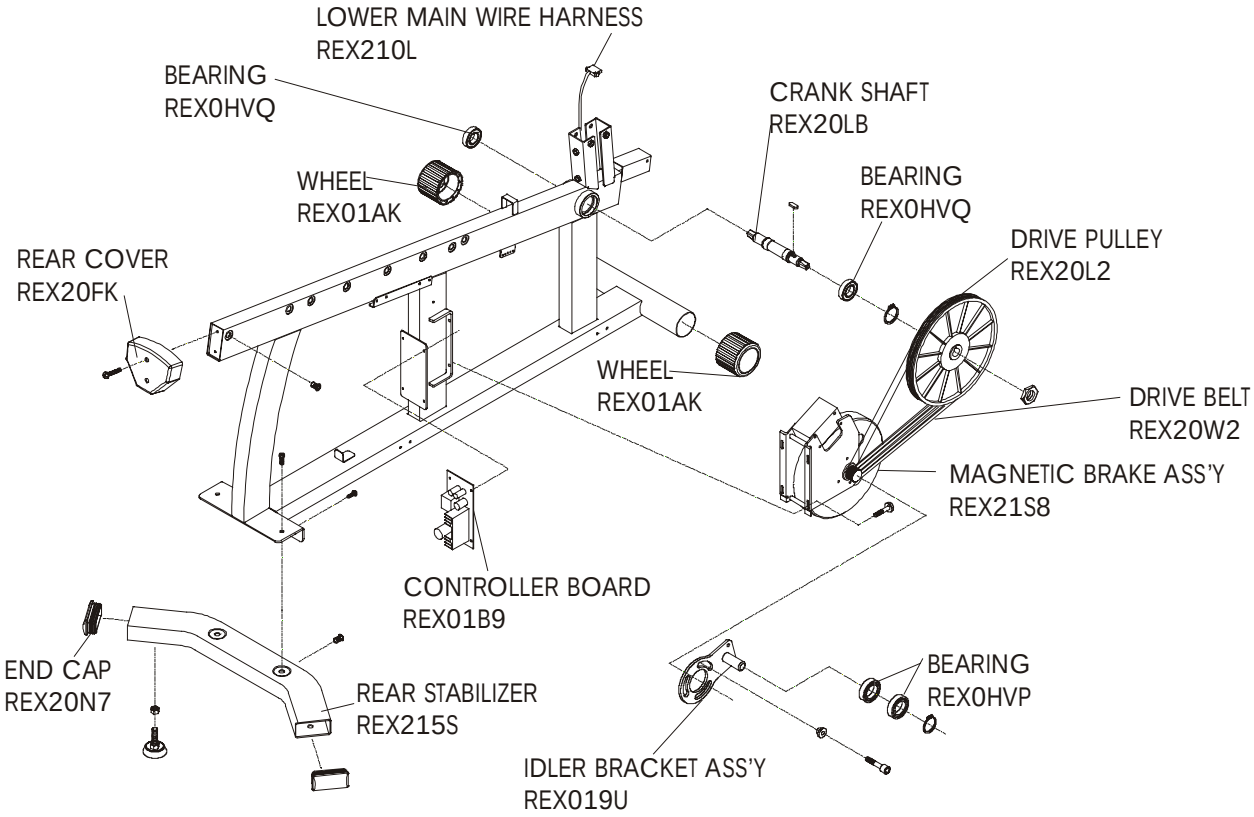
LOWER MAIN WIRE HARNESS
REX210L
BEARING
REX0HVQ
CRANK SHAFT
REX20LB
WHEEL
REX01AK
BEARING
REX0HVQ
DRIVE PULLEY
REX20L2
REAR COVER
REX20FK
WHEEL
REX01AK
DRIVE BELT
REX20W2
MAGNETIC BRAKE ASS'Y
REX21S8
CONTROLLER BOARD
REX01B9
END CAP
REX20N7
REAR STABILIZER
REX215S
BEARING
REX0HVP
IDLER BRACKET ASS'Y
REX019U

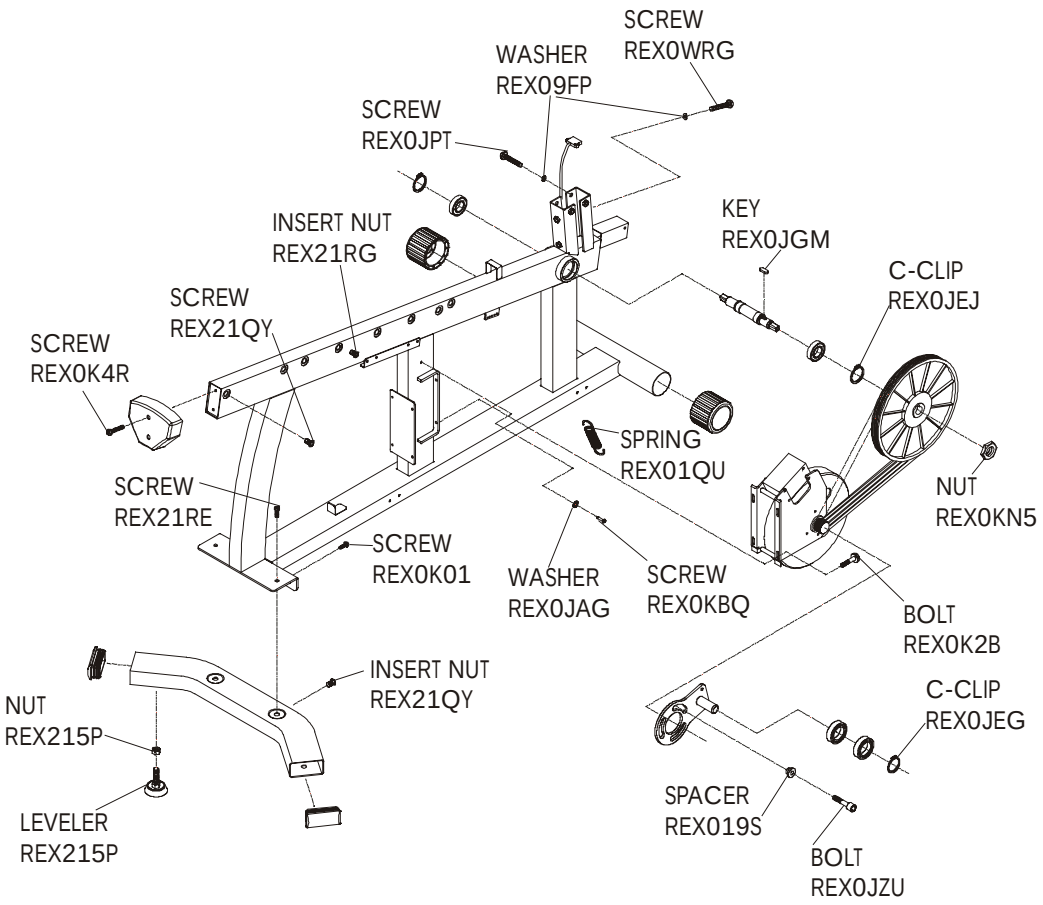
SCREW
REX0WRG
WASHER
REX09FP
SCREW
REX0JPT
INSERT NUT
REX21RG
KEY
REX0JGM
C-CLIP
REX0JEJ
SCREW
REX21QY
SCREW
REX0K4R
SPRING
REX01QU
SCREW
REX21RE
NUT
REX0KN5
SCREW
REX0K01
WASHER
REX0JAG
SCREW
REX0KBQ
BOLT
REX0K2B
INSERT NUT
REX21QY
C-CLIP
REX0JEG
NUT
REX215P
SPACER
REX019S
LEVELER
REX215P
BOLT
REX0JZU